Silo load cell

Characteristics

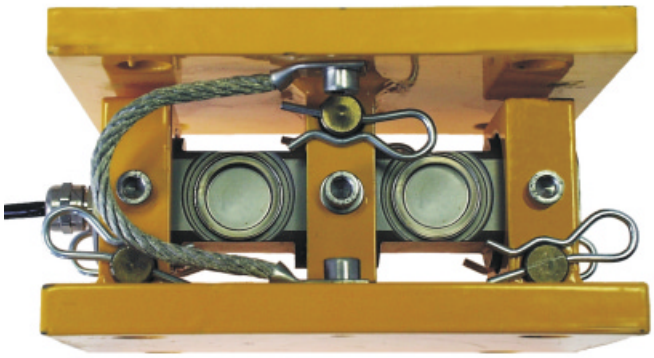

Ranges from 1 t to 75 t
Output 2 mV/V (±0,25 %)
Supply voltage 10 V DC
Accuracy < 0,05 % of end scale value
Degree of protection IP 68
Insensitive to off axis loads
Standard length of connection cable 4 m
Option: completely made of stainless steel
Sensor: double shearing load transducer

Dimensions

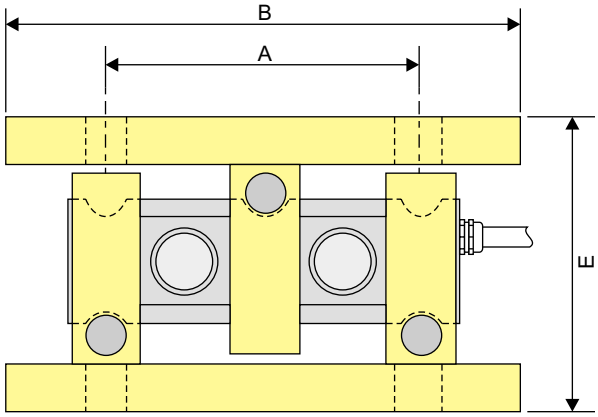

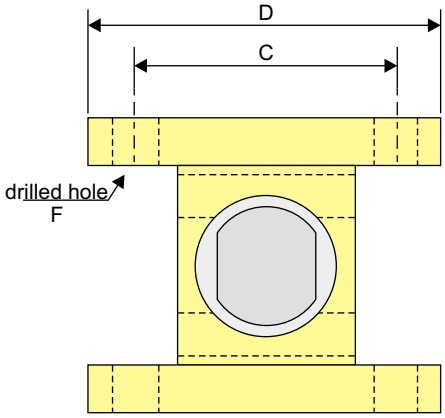

	Range	Dimensions (mm)					
		A	B	C	D	E	ØF
Size 1	**1 - 5 t**	105	150	94	124	88	13,5
Size 2	**2 - 20 t**	140	200	125	165	115	17,5
Size 3	**20 - 75 t**	175	280	175	230	160	22

Applications

For use in all ranges where weigths have to be measured, e.g. in electronic vehicle scales, in track scales, hoppers and silos in loading plants for ports and terotechnology.

Ordering Code

S	I	X	X	X	X	X	X	-	X	X	X

Load cell:	size 1 (1...5 t)	0
	size 2 (2...20 t)	1
	size 3 (20...75 t)	2
	size 1 (1...5 t), stainless steel completely	3
	size 2 (2...20 t), stainless steel completely	4
	size 3 (20...75 t), stainless steel completely	5
Range:	1 t	0
	2 t	1
	5 t	2
	7,5 t	3
	10 t	4
	15 t	5
	20 t	6
	30 t	7
	50 t	8
	75 t	9
Output:	2 mV/V, +/- 0,25%	0
Customized type	on request	0

Connections, example mounting

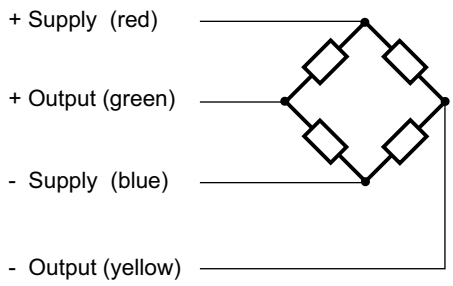

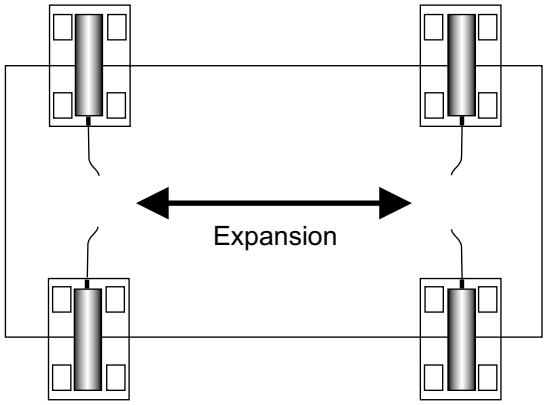

Technical Data

Input

Ranges	1; 2; 5; 7,5; 10; 15; 20; 30; 50; 75 t (Size 1: 1-5t; Size 2: 2-20 t; Size 3: 20-75 t)
Input resistance	750 ohms ±20 ohm
Insulation resistance	>500 Mohms at 100 VDC
Safe overload	max. 150% of nominal load

Output

Full load	2,0 mV/V ±0,25 %
No load	0 mV <± 2,0 %
Resistance	700 Ohm ±2 Ohm

Accuracy

Linearity	< 0,05 % of end scale value
Repeatability	< 0,01 % of end scale value
Temperature coefficient SPAN	< 0,005% of end scale value / °C
Temperature coefficient ZERO	< 0,005% of end scale value / °C

Power Supply

Recommended excitation	10 VDC

Ambient conditions

Compensated temperature	-10 up to +50°C
Operating temperature	-20 up to +70°C

Mechanics

Case	See table previous page
Material load cell	Stainless steel
Point of application of force	high alloy tool steel
Colour	signal yellow RAL 1003
Degree of protection	IP 68
Weight	Size 1: approx. 5,2 kg Size 2: approx. 13,6 kg Size 3: approx. 37,0 kg
Connection	4 m terminal cable, shielded, with polyurethane drain wire